FLAT PLATFORM
Made in the U.S.A.

GUNNELL INC.
USA MADE SINCE 1957

Date

Account

Account Contact

First Name

Last Name

Company

Phone Number

Shipping Address

Street Address

City

State

Zip Code

Billing Address

Street Address

City

State

Zip Code

Email

Comments

Note: To avoid customer confusion, we are separating the head and foot sides from the left and right sides. Head and foot barriers are now referred to as "Rails" and are selected separately from the sides. "Sides" now only refers to the left and/or right barriers, if selected.

Standard Features

Base Price *FP-001 - $4,875*

- Heavy duty frame and parts (400 lbs Weight Capacity)
- 8” Casters
- 20” RearWheels
- Height Adjustable Stroller Handle
- 5 year warranty on all Gunnell designed products.
- 90 Days on All Padding
- Anti-tips
- Manual Brakes

Frame Options

Choose between Standard - Black or Another Color

○ Standard - Black

○ Graphite Black - $250

○ Black Wrinkle - $250

○ Lime Green - $250

○ Forest Green - $250

○ Signal Violet - $250

○ Baby Blue - $250

○ Midnight Blue - $250

○ Tangerine - $250

○ Ruby Red - $250

○ Traffic Red - $250

○ Maroon - $250

○ Sunny Yellow - $250

○ Bubblegum Pink - $250

○ Raspberry - $250

○ Blue Violet - $250

○ Cornflower Blue - $250

○ Sky White - $250

○ Grey Smoke - $250

○ Misty Grey - $250

Platform Width

(Dimension IDW)

- ◯ FPW 22”-Standard Platform Width - $1,012.50
- ◯ FPCW-001-Custom Platform Width - $1,282.50 _____ *In Inches*

Platform Length

(Specify Dimensions) (Dimensions IDL)

- ◯ FPL 70”-Standard Platform Length - $1,012.50
- ◯ FPCL-001-Custom Platform Width - $1,282.50 _____ *In Inches*

Platform to Floor Height

(Dimension H)

- ◯ FPFH20 18” Platform to Floor Height (with 20” wheels) - $1,012.50
- ◯ FPFH24 22” Platform to Floor Height (with 24” wheels) - $1,147.50
- ◯ FPFH-001 Custom Platform to Floor Height - $1,552.50 _____ *In Inches*

Platform Rails

- ☐ FPS-001 Foot Rail - N/C
- ☐ FPS-001F 8” Fixed Head Rail - $668
- ☐ FPS-002 8” Flip Foot Rail - $1,046
- ☐ FPS-002 8” Flip Head Rail - $1,046

Platform Sides - Optional

(Dimension SH)

- ☐ FPS-001F 8” Fixed Sides - $668.25/side
  _____ # of sides
- ☐ FPS-002 8” Flip Down Hinged Sides - $1,046.25/side
  _____ # of sides
- ☐ FPS-003 8” Adjustable Angle Positive Locking Sides - $1,485/side
  _____ # of sides
- ☐ FPS-002R 8” Removable Platform Sides - $1,188/side
  _____ # of sides
- ☐ FPS-002RA 8” Removable Angle Adjustable Positive Locking Sides - $1,728/side
  _____ # of sides
- ☐ FPS -005 Custom Height Sides - $168.75/side
  _____ *(MUST SPECIFY)* Desired Height _____ # of sides

Platform Tilt in Space

- ◯ FPTIS Anterior (22.5°)/Posterior(22.5°) Tilt in Space - N/C
- ◯ FPTIS-006 Custom Anterior(A)/Posterior(P) Tilt in Space - $800
  - ◯ 45°A / 0°P ◯ 40°A / 5°P ◯ 35°A / 10°P ◯ 30°A / 15°P
  - ◯ 25°A / 20°P ◯ 20°A / 25°P ◯ 15°A / 30°P
  - ◯ 10°A / 35°P ◯ 5°A / 40°P ◯ 0°A / 45°P

Platform Base Padding Options

- ◯ FPBP-001 1” Poly Base - $472.50
- ◯ FPBP-002 1” Sunmate Base Pad (Specify Density) - $810
  - ◯ Soft ◯ Medium
- ◯ FPBP-003 2” Poly Base - $607.50
- ◯ FPBP-004 2” Sunmate Base (Specify Density) - $1,215
  - ◯ Soft ◯ Medium
- ◯ SPBP-009 Custom Base Padding - Quote

Platform Cover Options

- ◯ FPBP-005 Vinyl Padding Cover with Zipper - $519.75
- ◯ FPBP-006 Dartex Padding Cover with Zipper - $945
- ◯ FPBP-007 Rubatex Padding Cover with Zipper - $1,296

Rail Padding Options - Optional

- ◯ FPSP-001 1/2” Poly Rail Pads - $391.50 each _____ *QTY*
- ◯ FPSP-002 1/2” Sunmate Rail Pads (specify density) - $607.50 each
  - ◯ Soft ◯ Medium _____ *QTY*
- ◯ FPSP-003 1” Poly Rail Pads - $526.50 each _____ *QTY*
- ◯ FPSP-004 1” Sunmate Rail Pads (specify density) - $877.50 each
  - ◯ Soft ◯ Medium _____ *QTY*

Side Padding Options - Optional

- ◯ FPSP-001 1/2” Poly Side Pads - $391.50 each _____ *QTY*
- ◯ FPSP-002 1/2” Sunmate Side Pads (specify density) - $607.50 each
  - ◯ Soft ◯ Medium _____ *QTY*
- ◯ FPSP-003 1” Poly Side Pads - $526.50 each _____ *QTY*
- ◯ FPSP-004 1” Sunmate Side Pads (specify density) - $877.50 each
  - ◯ Soft ◯ Medium _____ *QTY*

Rail Cover Options - Optional

- ◯ FPSP-005 Vinyl Padding Cover with Zipper - $162 each _____ *QTY*
- ◯ FPSP-006 Darlex Padding Cover with Zipper - $648 each _____ *QTY*
- ◯ FPSP-007 Rubatex Padding Cover with Zipper $592.65 each _____ *QTY*
- ◯ FPSP-008 Custom Rail Padding - Quote

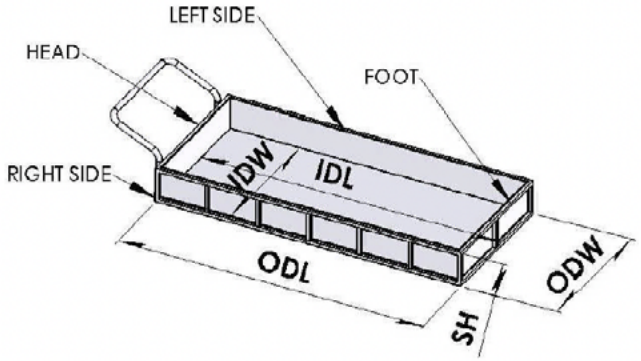

Side Cover Options - Optional

- ◯ FPSP-005 Vinyl Padding Cover with Zipper - $162 each _____ *QTY*
- ◯ FPSP-006 Darlex Padding Cover with Zipper - $648 each _____ *QTY*
- ◯ FPSP-007 Rubatex Padding Cover with Zipper $592.65 each _____ *QTY*
- ◯ FPSP-008 Custom Side Padding - Quote

Wheel Options

- ◯ FPW20 20” Rear Wheels - N/C
- ◯ FPR24 24” Rear Wheels - $472.50
- ☐ Optional Add-On: SP-FF Flat Free Wheel Option - $168.75

Wheel Locks or Disc Brakes (N/C)

- ◯ FP-WL Wheel Locks
- ◯ Disc Brakes (caregiver operated) (E2228) - $1,460
- ◯ None

Stroller Handle Options

- ◯ FPSH Height Adjustable Stroller Handle - N/C
- ◯ FPO-003 Height & Angle Adjustable Stroller Handle - $808.65

Custom Options

Select any of the following:

- ☐ FPCO-TS Tilt in Space - $5,130
- ☐ FPCO-003 Lateral Tilt - $5,130
- ☐ FPCO-TP Transportation Package - $1,687.50
- ☐ FPCO-LB Single Button Actuated Lap Belt (K0108) - $42
- ☐ FPCO-001 Tapered Corners - $506.25
- ☐ FPCO-012 Roller Bumpers - $506.25
- ☐ FPCO-002 IV-Pole - $540
- ☐ FPCO-013 Anti Tip - $100
- ☐ FPCO-019 Vent Tray - $538.65/ea

Power Options

Select any of the following:

- ☐ FPCO-PATS Tilt in Space - $6,075
- ☐ FPCO-PALT Lateral Tilt - $6,075
- ☐ FPCO-PALF Power Lift - $12,757.50

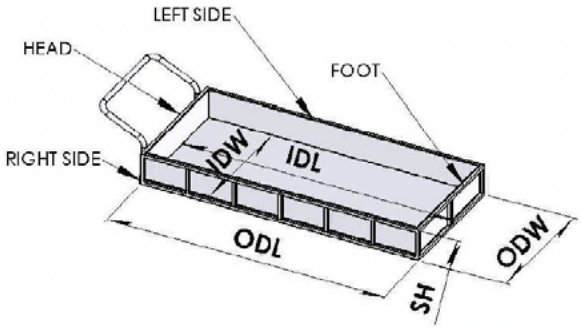

FLAT PLATFORM

Made in the U.S.A.

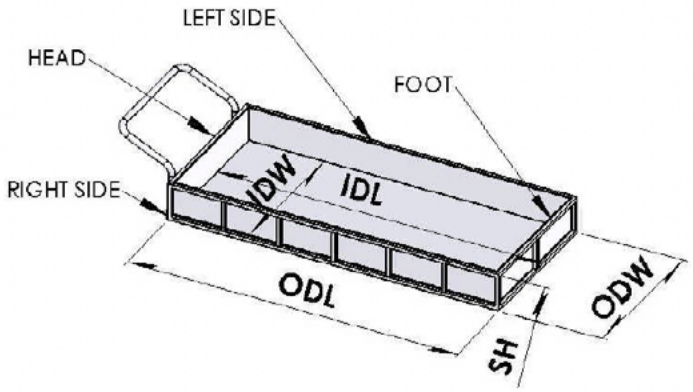

Finished Product Dimensions

Inside Length IDL:
Inside Width IDW:
Outside Length ODL:
Outside Width ODW:
Height of Side (see notes 7,8,9 above) SH:
Platform to Floor Height (see note 6 above) H:

Maximum allowable cart width (maximum allowable cart width for going through doors) ODW:

Platform Sides/Rails

Number of Sides (including head and foot):

☐ Head Rail ☐ Foot Rail
☐ Left Side ☐ Right Side

Options

Base pad thickness *(in inches)*
Side pad thickness *(in inches)*

Footnotes

1. Gunnell will select factory settings if no setting is made

2. Inside Width (IDW): The measurement between side pads, side ABS, or width of top platform, whichever is smallest

3. Inside Length (IDL): The measurement between side pads,side ABS, or width of top platform, whichever is smallest

4. Outside Width (ODW): Inside Width, IDW, plus the following

measurement whenever applicable:

(i) 2” for fixed sides;

(II) 3” for hinged flip down sides;

(III) 4” for removable sides when sides not removed;

(IV) 4.5” for angle adjustable locking sides; and

(V) padding thickness

5. Outside Width is the Inside Width for removable sides when sides removed

6. Platform to Floor Height: measurement from the ground to the top of the platform below the ABS.

7. Maximum 4 sides/rails: head, foot, left side and right side.

8. Side/Rail Height: measurement from the top of sides to the top of steel platform, ABS, or base pads, whichever is the smallest

9. Factory setting of 8” Side/Rail Height is measured from top of steel platform to the top of sides